Motion Reference Units MRU

- ABS Certification, affordable price
- IP-67 sealed or Subsea version
- 5% / 5 cm Heave accuracy
- up to 0.01 deg Pitch and Roll accuracy
- 40 cm DGPS or 1 cm RTK position
- 0.03 m/sec Velocity accuracy
- 0.005 m/sec^2 Acceleration accuracy
- 0.0002 deg/sec Angular rate accuracy
- NMEA 0183 and TSS1 output data format
- Kongsberg/Seatex, SMC & Teledyne data formats*

Datasheet

Inertial Labs
Attitude is Everything

Inertial Labs has developed **Motion Reference Units (MRU)** to meet requirements from marine and hydrographic applications. **MRU** is enhanced, high-performance strapdown Motion Sensor, that determines Pitch & Roll, Heave, Sway, Surge, Accelerations, Angular rates, Heading, Velocity and Positions for any device on which it is mounted.

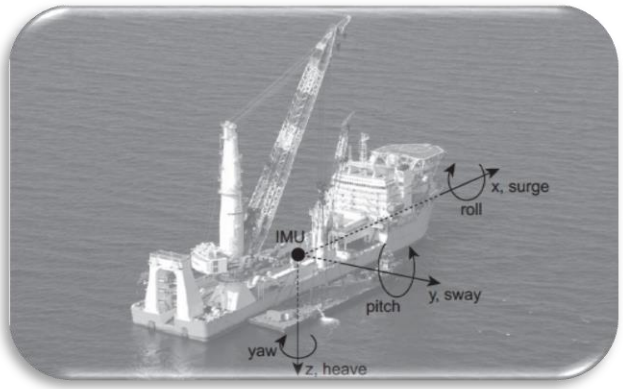

The Inertial Labs **Motion Reference Units** utilizes solid state 3-axes each of precision accelerometers, magnetometers, gyroscopes and barometric sensors to provide accurate Heave, Sway, Surge, Pitch and Roll of the device under measure.

Integration of very low noise gyroscopes output provides high frequency, real-time measurement of the Vessel, Ships, Helidecks, ROV, Marine antennas, Cranes rotation about all three rotational axes.

Through a combination of proven sector expertise and a continued investment in technological innovation, Inertial Labs delivers the optimum balance of price and performance ratio solutions for its customers.

KEY FEATURES AND FUNCTIONALITY

- Kongsberg/Seatex, Teledyne and SMC data formats
- State-of-the-art algorithms for Survey, Vessels, Ships, Active Heave Compensators, Cranes, Helideck, ROV, AUV, DPS, Buoys, Echo Sounders, Offshore Platforms
- 0.02 deg RMS Pitch & Roll dynamic accuracy
- 5% or 5 cm RMS (whichever is greater) Heave accuracy
- 3 cm Oceanix Nearshore Horizontal Position Accuracy, 1-0.05 m VERIPOS Horizontal Position Accuracy
- 0.005 m/sec^2 linear acceleration accuracy
- NMEA 0183, TSS1 output data formats
- HYPACK software compatibility
- Environmentally sealed (IP67) or Subsea Enclosure (200 meters depth)
- Affordable price

Our **MRU**'s featuring developed few micro g Bias in-run stability Micro Electro Mechanical System (MEMS)-based accelerometers. New generation of Inertial Labs 1 deg/hr Bias in-run stability MEMS-based gyroscopes are an ideal solution for demanding marine applications, with their electronic nature negating the problems associated with expensive mechanical gyro solutions, as well as those based on fiber optic (FOG) technology. Inertial Labs MEMS gyroscopes set the standard for the industry, with our high-end **MRU**s featuring gyros that enable sector-leading accuracy and reliability standards.

Measured Parameters	MRU-B * Basic 	MRU-E Enhanced 	MRU-P Professional 
Heave, Surge, Sway (% / cm)	+	+	+
Pitch & Roll (deg)	+	+	+
Heading/Yaw (deg)		+	+
Velocity (meters/sec)			+
DGPS/RTK Positions (meters)			+

** MRU-B1 (Heave or Pitch & Roll measurement) and MRU-B2/B22 (Heave, Pitch & Roll measurements) are available*

MRU Specifications

Parameter	Units	MRU-B (Basic)		MRU-E (Enhanced)	MRU-P (Professional)	
Basic Output signals		Heave, Heave Velocity, Heave Acceleration, Surge, Sway, Pitch & Roll, Pitch & Roll Rate, Pitch & Roll Velocity, Accelerations, Angular rates, Significant Wave Height, Temperature, Barometric data, Pulse Per Second (PPS)				
Output data formats		Kongsberg/Seatex, Ship Motion Control SMC, Teledyne TSS*				
Additional output signals				Heading/ Yaw	Heading/Yaw GPS/GLONASS/GALIELO/ BeiDou/SBAS/DGPS/RTK Positions, Velocity	
Compatibility		SBES/MBES: Teledyne; R2Sonic; WAASP; Kongsberg; EdgeTech; NORBIT; IMAGENEX HYPACK, QINSY and Novatel Inertial Explorer software*				
Update rate	Hz	1 … 200 (user settable)		1 … 200 (user settable)	1 … 200 (user settable)	
Internal Data Logger		64 GB (optional)				
Start-up time	sec	<1		<1	<1	
Heave, Surge, Sway	**Units**	MRU-B		MRU-E	MRU-P	
Measurement range	meters	±300		±300	±300	
Resolution	meters	0.01		0.01	0.01	
Accuracy, RMS	% (meters)	5 (0.05)		5 (0.05)	5 (0.05)	
Delayed Accuracy, RMS	% (meters)	3 (0.03)		3 (0.03)	3 (0.03)	
Pitch and Roll	**Units**	MRU-B		MRU-E	MRU-P	
Range: Pitch, Roll	deg	±90, ±180		±90, ±180	±90, ±180	
Angular Resolution	deg	0.005		0.01	0.01	
Dynamic Accuracy	deg RMS	0.02 (MRU-B1, B1.1, B2) 0.01 (MRU-B22)		0.02	0.02	
Heading	**Units**	MRU-B		MRU-E	MRU-P	
Range	deg	-		0 to 360	0 to 360	
Angular Resolution	deg	-		0.01	0.01	
Static Accuracy in whole Temperature Range	deg	-		0.3	0.2	
Dynamic Accuracy	deg RMS	-		0.6	0.4	
Post processing accuracy (1)	deg RMS	-		0.1	0.1	
Positions, Velocity and Timestamps	**Units**	MRU-B		MRU-E	MRU-P	
Horizontal position accuracy (GPS L1), RMS	meters	-		-	1.5	
Horizontal position accuracy (SBAS), RMS	meters	-		-	0.6	
Horizontal position accuracy (DGPS), RMS	meters	-		-	0.4	
Horizontal position accuracy (RTK), RMS	meters				0.01 + 1 ppm	
Horizontal position accuracy (Oceanix Nearshore), RMS (3)	meters				0.03	
Horizontal position accuracy (VERIPOS), RMS (3)	meters				1-0.05	
Horizontal position accuracy (post processing) (1)	meters	-		-	0.005	
Velocity accuracy, RMS	meters/sec	-		-	0.03	
GNSS raw data rate	Hz	-		-	20	
Timestamps accuracy	nano seconds	20		20	20	
Gyroscopes	**Units**	MRU-B		MRU-E	MRU-P	
Measurement range	deg/sec	±450		±450	±450	
Bias in-run stability (RMS, Allan Variance)	deg/hr	1		1	1	
Noise density	deg/sec√Hz	0.004		0.004	0.004	
Accelerometers	**Units**	MRU-B		MRU-E	MRU-P	
Measurement range	g	±8		±8	±8	
Bias in-run stability (RMS, Allan Variance)	mg	0.005		0.005	0.005	
Noise density	mg√Hz	0.025		0.025	0.025	
Magnetometers	**Units**	MRU-B		MRU-E	MRU-P	
Measurement range	Gauss	-		±1.6	±1.6	
Bias in-run stability, RMS	nT	-		0.2	0.2	
Noise density, PSD	nT√Hz	-		0.3	0.3	
Pressure	**Units**	MRU-B		MRU-E	MRU-P	
Measurement range	hPa	300 – 1100		300 – 1100	300 – 1100	
Bias in-run stability (RMS, Allan Variance)	Pa	2		2	2	
Noise density	Pa/√Hz	0.8		0.8	0.8	
Environment	**Units**	MRU-B		MRU-E	MRU-P	
Operating temperature	deg C	-40 to +70		-40 to +70	-40 to +70	
Storage temperature	deg C	-50 to +85		-50 to +85	-50 to +85	
MTBF	hours	100,000		100,000	100,000	
Vibration		IEC 60945/EN 60945		IEC 60945/EN 60945	IEC 60945/EN 60945	
Electrical	**Units**	MRU-B		MRU-E	MRU-P	
Supply voltage	V DC	9 to 36		9 to 36	9 to 36	
Power consumption	Watts	1 (2 with data logger)		1.4 (2.4 with data logger)	3.5 (4.5 with data logger)	
Output Interface	-	Ethernet, RS-232, RS-422, CAN				
Output data format	-	Binary, TSS-1, NMEA 0183 ASCII, Kongsberg /Seatex, SMC, Teledyne*				
Compliance to EMCD, immunity/emission		IEC 60945/EN 60945		IEC 60945/EN 60945	IEC 60945/EN 60945	
Connector (2)		Binder Series 723		Binder Series 723	Binder Series 723 & TNC	
Physical	**Units**	IP-67	Subsea	IP-67	IP-67	Subsea
Size	mm	120 x 50 x 53	245 x 140 x115	120 x 50 x 53	120 x 50 x 53	245 x 140 x 115
Weight	gram	220	6570	280	320	6670
Enclosure		IP-67	Subsea (1000m)	IP-67	IP-67	Subsea (1000m)

(1) Post-processing results using third party software. (2) Cable with pigtail wires or with Souriau 851-36RG 16-26s50 connector are the options (3) Requires a subscription to a Oceanix data service, contact Inertial Labs for more information

Inertial Labs: Address: 39959 Catoctin Ridge Street, Paeonian Springs, VA 20129 U.S.A.
Tel: +1 (703) 880-4222, Website: www.inertiallabs.com

MRU-B / MRU-E mechanical interface drawing (IP-67 version)

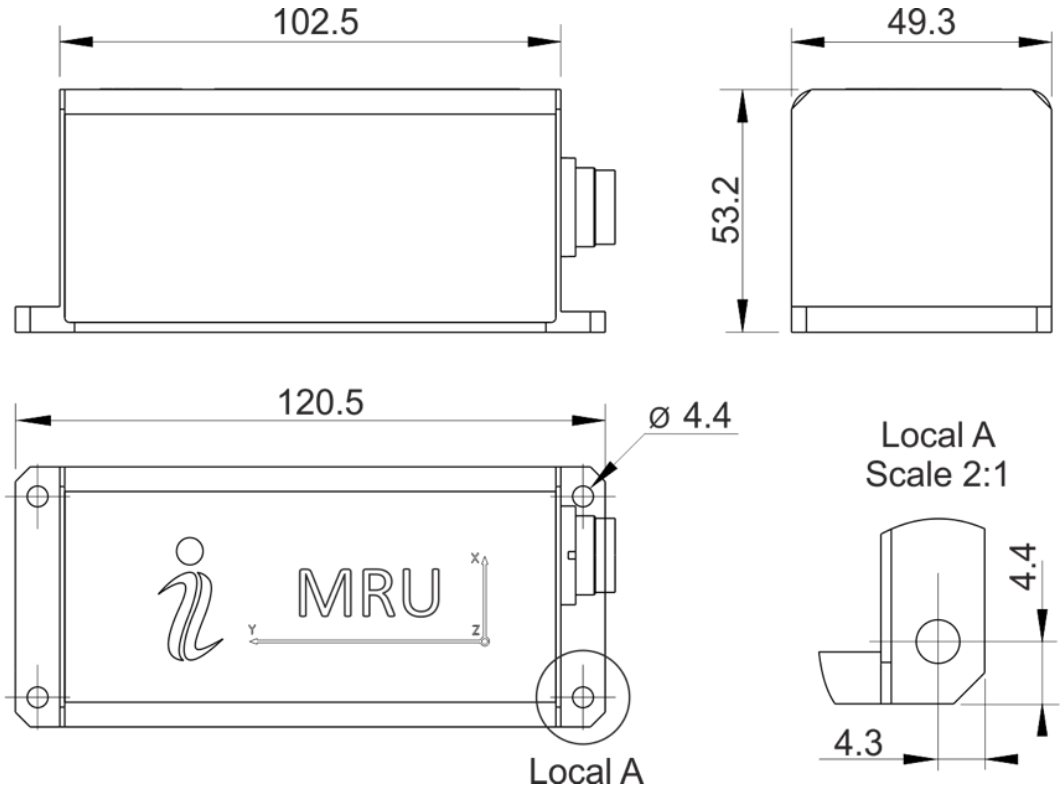

MRU-P mechanical interface drawing

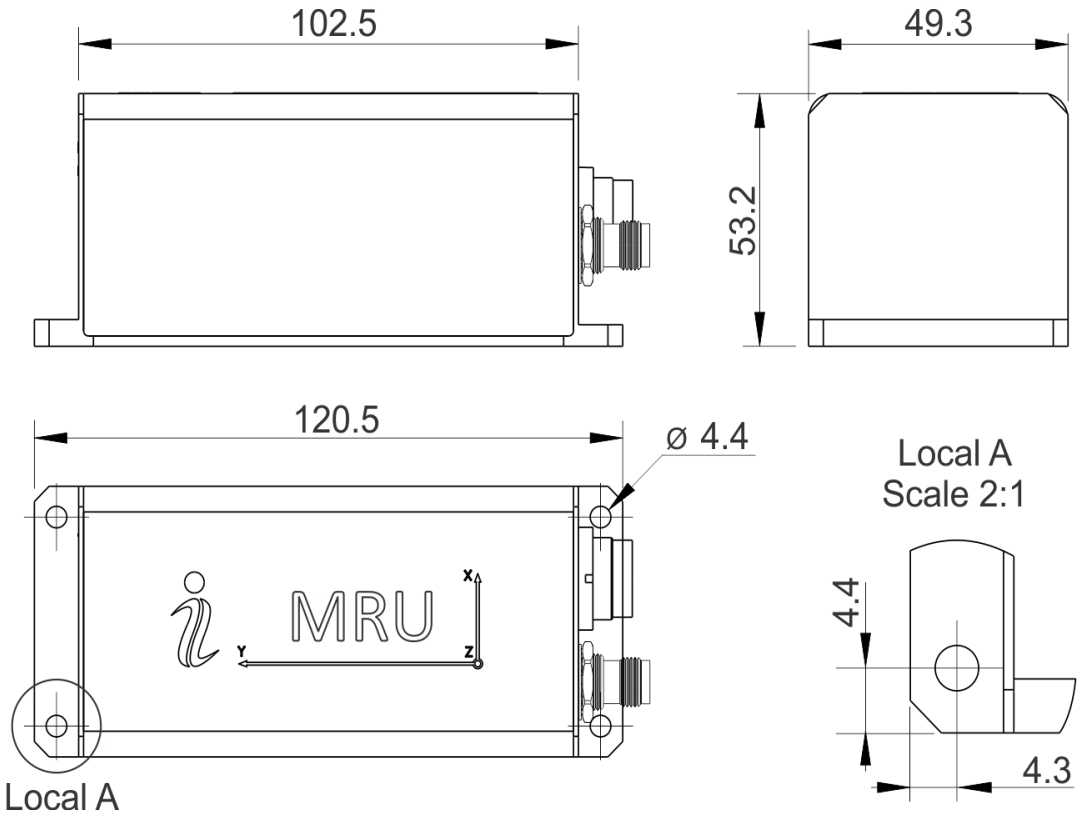

MRU-BS mechanical interface drawing (Subsea enclosure)

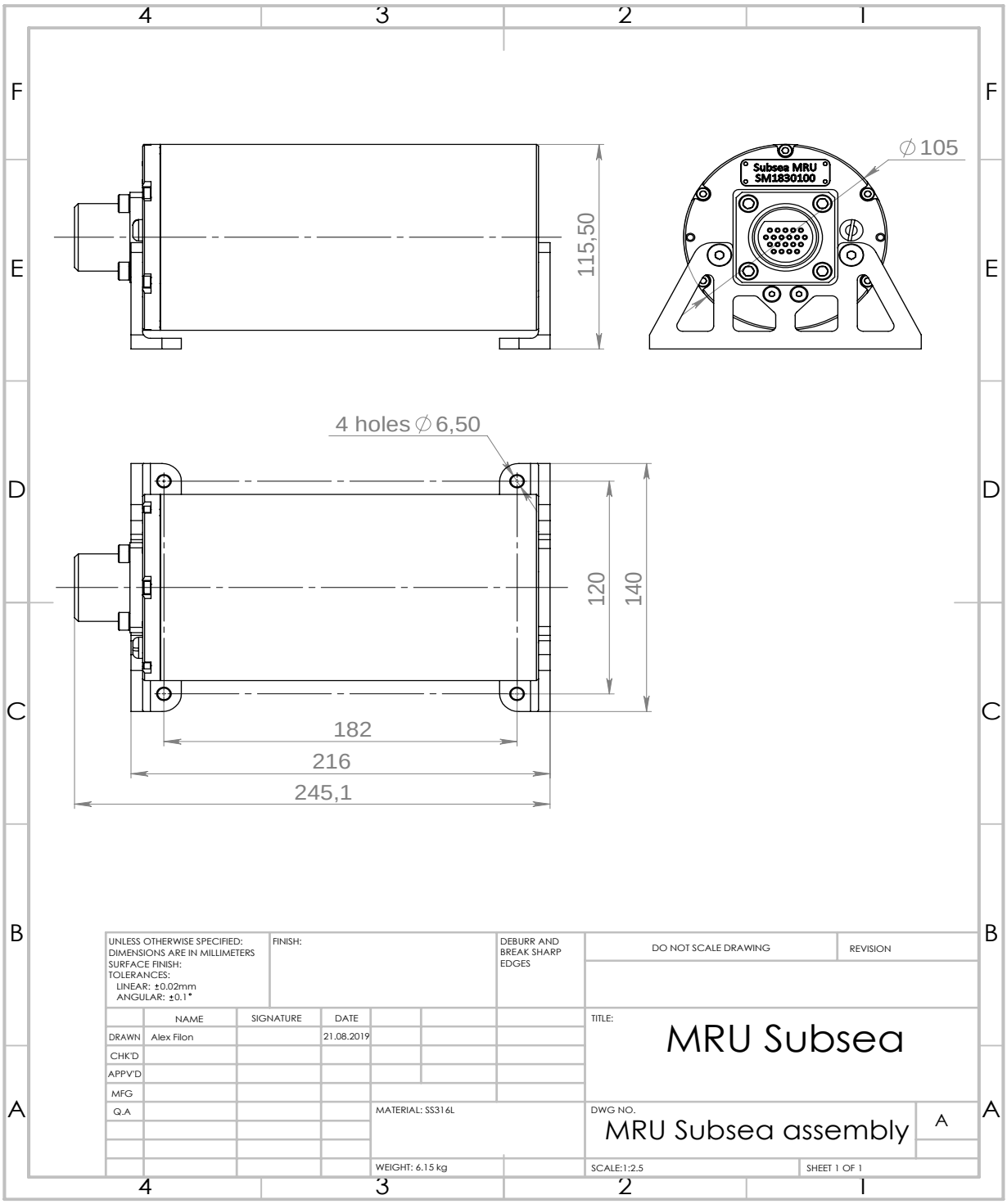

MRU Subsea assembly

Notes:

1. All dimensions are in millimeters.
2. All dimensions within this drawing are subject to change without notice. Customers should obtain final drawings before designing any interface hardware.
3. Data connector type: please check ICD
4. GNSS connector type (MRU-P): TNC-Female

MRU-B Part numbers structure (IP-67)

MRU-B part numbers description								
Model	**Gyro**	**Accel**	**Calibration**	**Connector**	**Color**	**Data Logger**	**Version**	**Interface**
MRU-B1	G450	A8	TGA	C3	B	S64 (optional)	V0	15
MRU-B1.1							V1	125
MRU-B2								1245
MRU-B22								

Example: MRU-B1-G450-A8-TGA-C3-B-S64-V1.1245

MRU-BS Part numbers structure (Subsea)

MRU-B part numbers description								
Model	**Gyro**	**Accel**	**Calibration**	**Connector**	**Color**	**Data Logger**	**Version**	**Interface**
MRU-B1S	G450	A8	TGA	C13	S	S64 (optional)	V1	1245
MRU-B1.1S								
MRU-B2S								
MRU-B22S								

Example: MRU-B1S-G450-A8-TGA-C13-S-S64-V1.1245

MRU-E Part numbers structure (IP-67)

MRU-E part numbers description								
Model	**Gyro**	**Accel**	**Calibration**	**Connector**	**Color**	**Data Logger**	**Version**	**Interface**
MRU-E	G450	A8	TMGA	C3	B	S64 (optional)	V0	1245
							V1	

Example: MRU-E-G450-A8-TMGA-C3-B-S64-V1.1245

MRU-P Part numbers structure (IP-67)

MRU-P part numbers description									
Model	**Gyro**	**Accel**	**Calibration**	**Connector**	**Color**	**Data Logger**	**GNSS Receiver**	**Version**	**Interface**
MRU-P	G450	A8	TMGA	C3	B	S64 (optional)	O719	V4	1245
								VR5	

Example: MRU-P-G450-A8-TMGA-C3-B-S64-O719-V4.1245

Description:

- MRU-B1: Heave Sensor (IP-67)
- MRU-B1S: Heave Sensor (Subsea)
- MRU-B1.1: Pitch & Roll Sensor (IP-67)
- MRU-B1.1S: Pitch & Roll Sensor (Subsea)
- MRU-B2: Heave, Surge, Sway, Pitch and Roll Sensor (IP-67)
- MRU-B22: Heave, Surge, Sway, Pitch and Roll Sensor (IP-67)
- MRU-B2S: Heave, Surge, Sway, Pitch and Roll Sensor (Subsea)
- MRU-B22S: Heave, Surge, Sway, Pitch and Roll Sensor (Subsea)
- MRU-E: Heading, Heave, Surge, Sway, Pitch and Roll Sensor (IP-67)
- MRU-P: Heave, Surge, Sway, Pitch, Roll, Heading, Position and Velocity Sensor
- G450: Gyroscopes measurment range = ±450 deg/sec
- A8: Accelerometers measurement range = ±8 g
- TGA: Gyroscopes and Accelerometers
- TMGA: Magnetometers, Gyroscopes and Accelerometers (MRU-E only)
- C3: 24 pins connector (IP67)
- C13: 20 pins connector (Subsea)
- B: Black color of enclosure (IP67)
- S: Silver color of enclosure (Subsea)
- S64: 64GB embedded Data Logger (optional)
- O719: GNSS receiver
- V0: Version 0 (initial design for MRU-B and MRU-E)
- V1: Version 1 (updated design for MRU-B and MRU-E)
- V4: GPS L1/L2; GLO G1/G1; DGPS, SBAS (MRU-P)
- VR5: GPS L1/L2; GLO G1/G1; DGPS, SBAS, RTK (MRU-P)
- .15: RS-232 and Ethernet
- .125: RS-232, RS-422 and Ethernet
- .1245: RS-232, RS-422, CAN, Ethernet

Inertial Labs Motion Reference Units (MRU) can be easily integrated into existing systems using the following bracket.

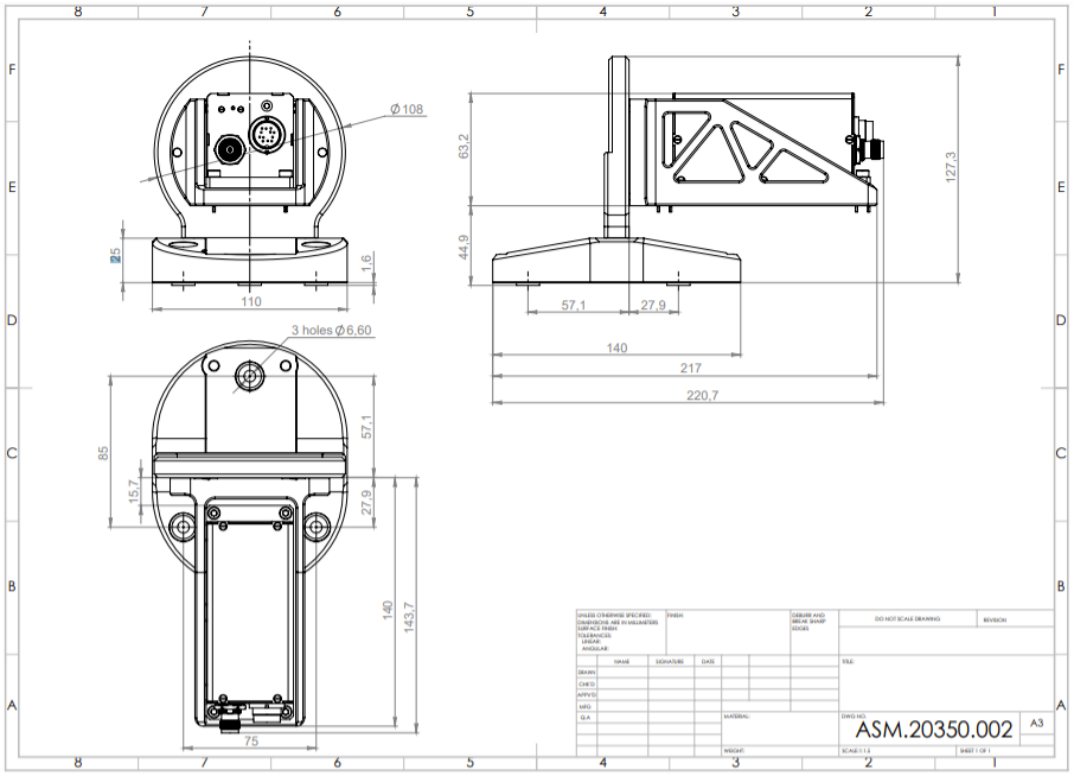

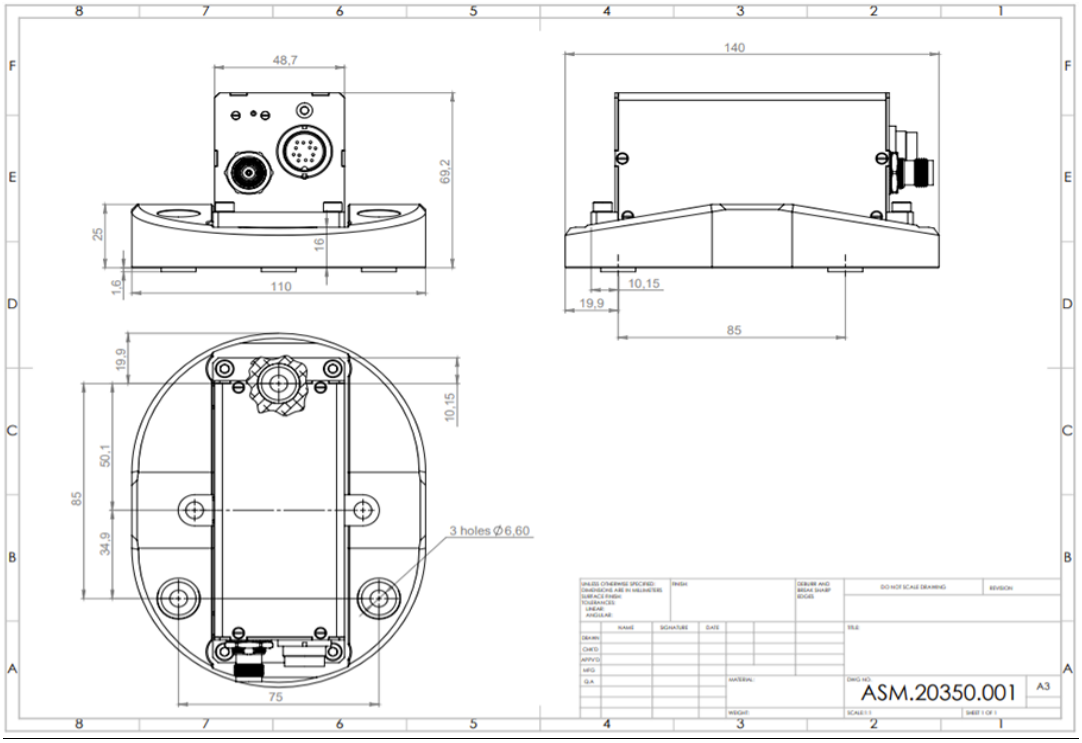

Note:
1) All dimensions are in millimeters.
2) All dimensions within this drawing are subject to change without notice.

Inertial Labs: Address: 39959 Catoctin Ridge Street, Paeonian Springs, VA 20129 U.S.A.
Tel: +1 (703) 880-4222, Website: www.inertiallabs.com

IMU Center Diagram

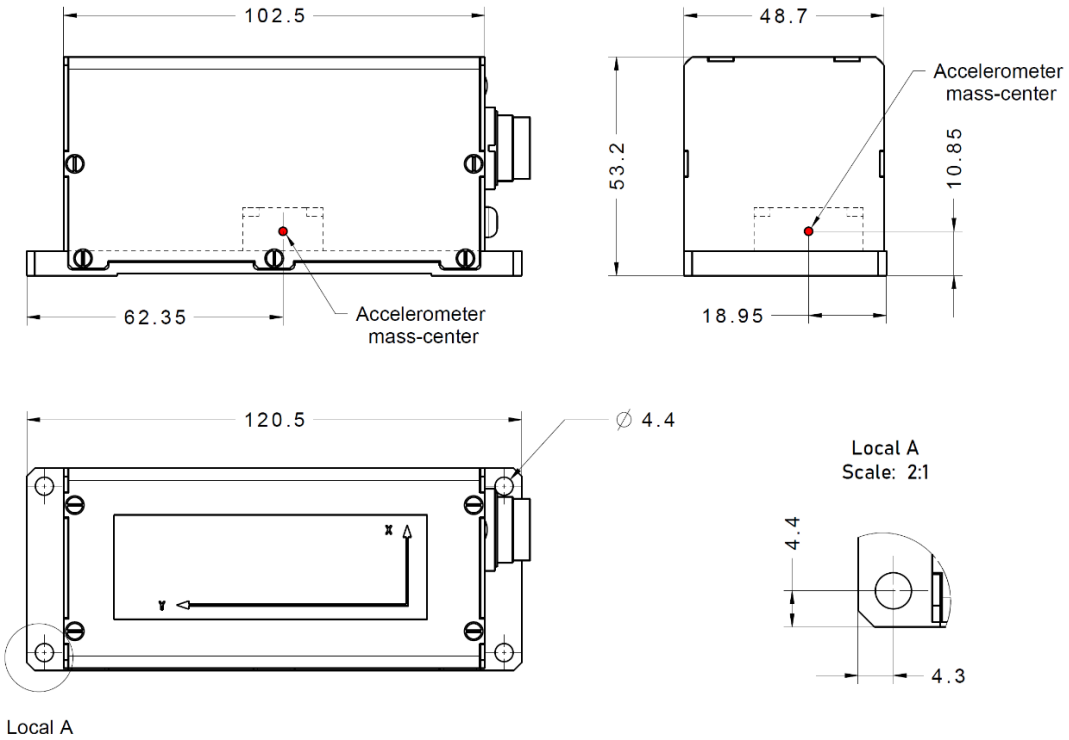

DIMENSIONS ARE IN MILLIMETERS

All dimensions within this drawing are subject to change without notice. Customers should obtain final drawings before designing any interface hardware.

Inertial Labs: Address: 39959 Catoctin Ridge Street, Paeonian Springs, VA 20129 U.S.A.
Tel: +1 (703) 880-4222, Website: www.inertiallabs.com